RT-186MA-A

Undercounter Refrigerator

PRODUCT FEATURES

- Complete with stainless steel top.
- Standard with 6 shelves and 3 doors.
- Programmable electronic controller and display.
- 2 years parts and labour warranty.
- Comes standard with 4 x lockable (115 mm) castors (not legs).
- Optional Adjustable legs 150 - 180mm (Sold separately)

TECHNICAL DRAWING

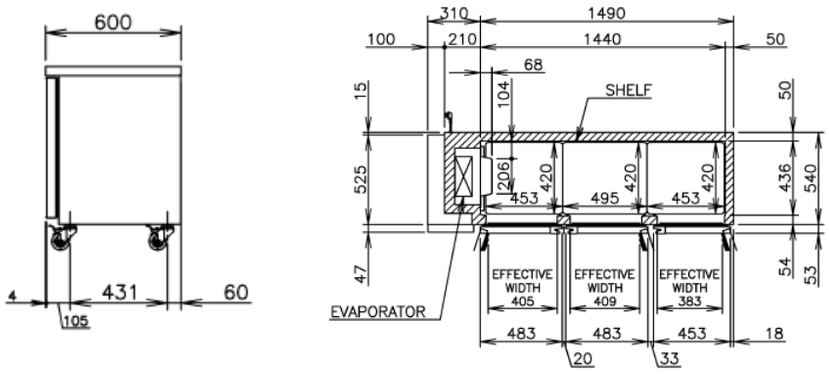

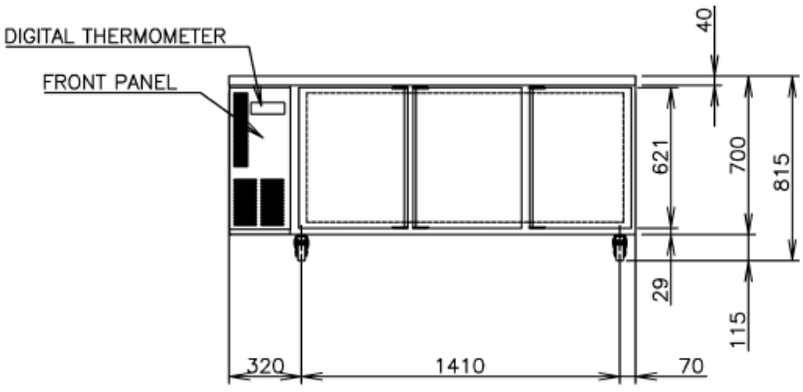

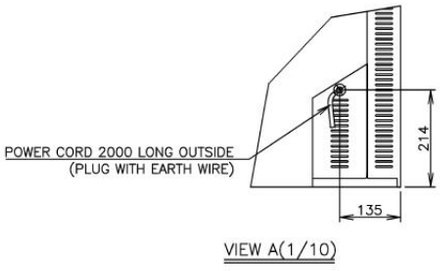

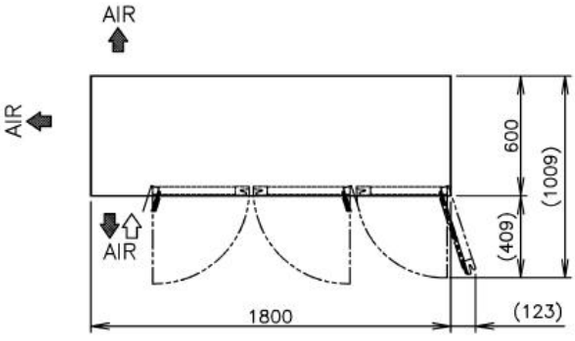

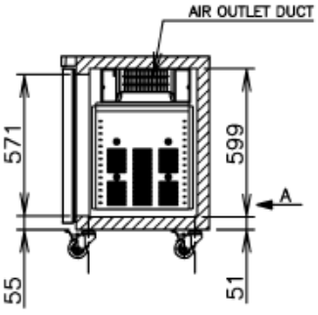

PRODUCT SPECIFICATION

Interior	Stainless Steel, ABS Plastic (Doors)
Exterior	Stainless Steel, Galvanized Steel (Rear/Bottom), ABS plastic (Top & Bottom on Door)
Max Storage Capacity	401L
Temperature Control	Microprocessor controlled Adjustable from -6 to 12°C
Evaporator	Fin & Tube type
Outside Dimensions	1800mm (W) x 600mm (D) x 815mm(H)
Inside Dimensions	1440mm (W) x 436mm (D) x 599mm (H)
Refrigeration System	Forced Air Circulation
Weight Net/Gross (kg)	93 / 98
AC Supply Voltage	1 Phase 220-240V 50Hz /10amp Plug
Amperage	Rated: 2.1A
Refrigerant	R134A
Operating Conditions	Ambient Temp.: 5-43°C Voltage Range: Rated Voltage ±6%

Descriptions and specifications are subject to change at any time, without notice. Illustrations for demonstration purposes.

Copyright © 2020 Hoshizaki Lancer Pty Ltd. All right reserved. E&OE Date: Sept 2020